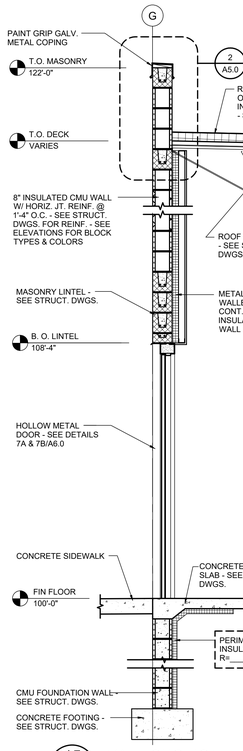

15 A11.0 WALL SECTION
SCALE: 1/2"=1'-0"

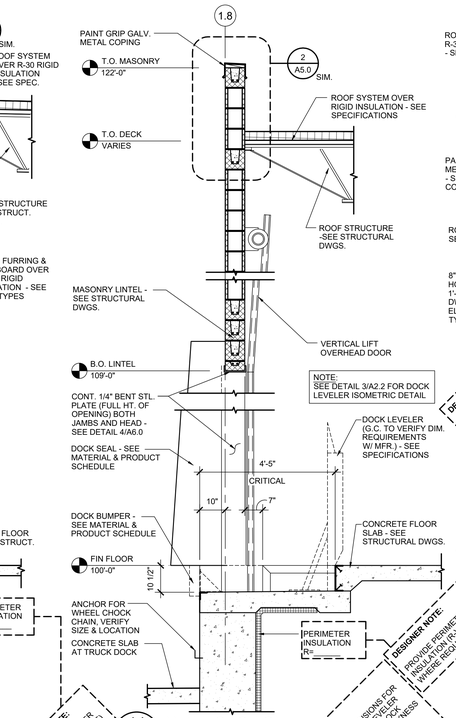

14 A11.0 WALL SECTION
SCALE: 1/2"=1'-0"

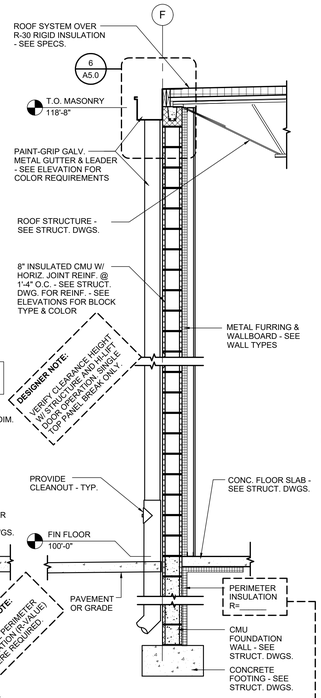

13 A11.0 WALL SECTION
SCALE: 1/2"=1'-0"

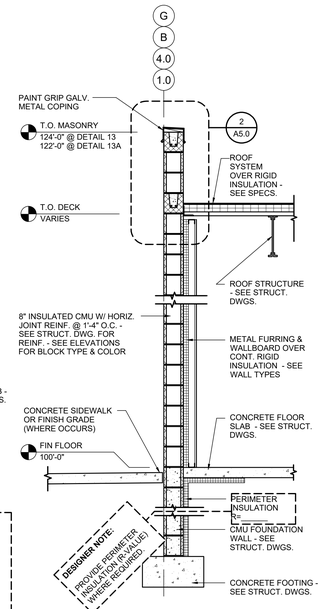

12A A11.0 12 A11.0 WALL SECTION
SCALE: 1/2"=1'-0"

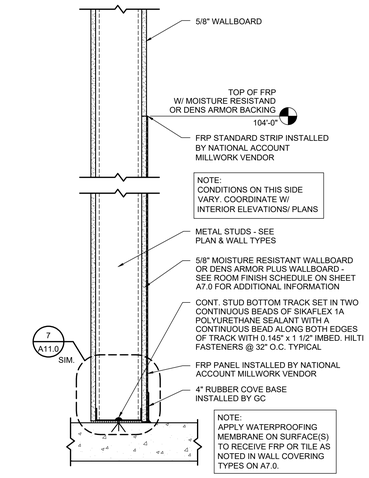

11 A11.0 BASE / TRIM DETAIL
SCALE: 1 1/2" = 1'-0"

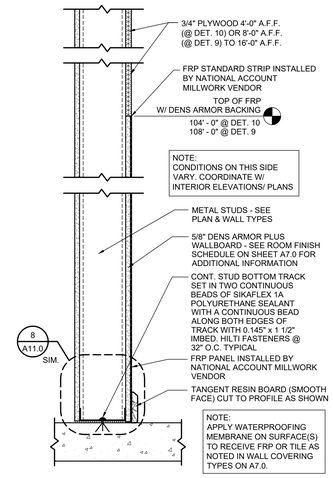

10 A11.0 9 A11.0 BASE / TRIM DETAIL
SCALE: 1 1/2" = 1'-0"

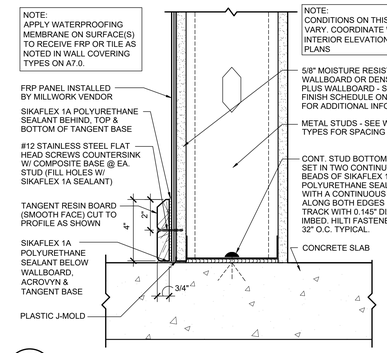

8 A11.0 DETAIL - BASE @ STUD WALL
SCALE: 3" = 1'-0"

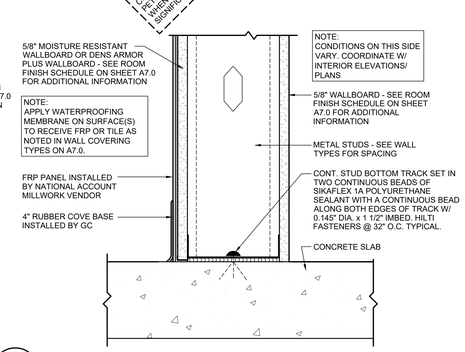

7 A11.0 DETAIL - BASE @ STUD WALL
SCALE: 3" = 1'-0"

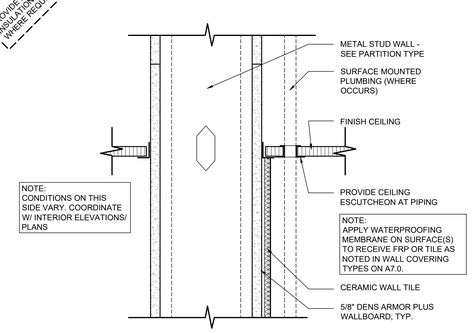

6 A11.0 DETAIL - CEILING PENETRATION
SCALE: 3" = 1'-0"

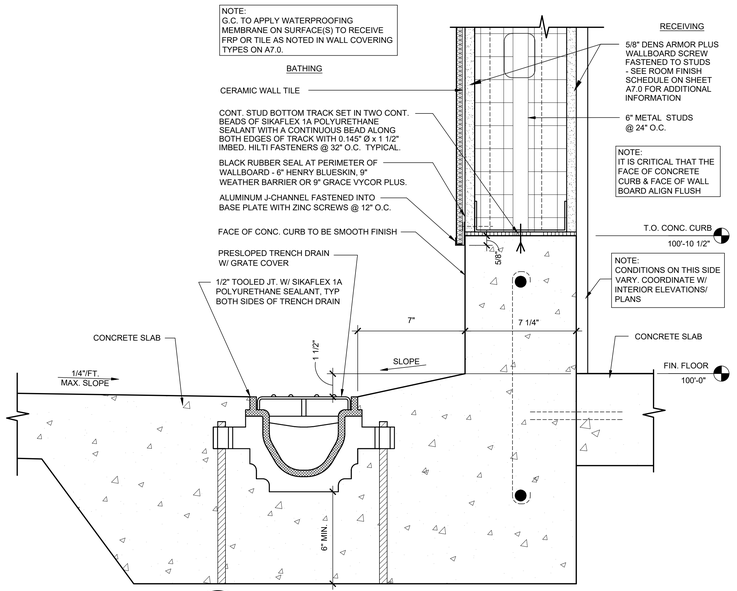

5 A11.0 TRENCH DRAIN @ BATHING
SCALE: 3" = 1'-0"

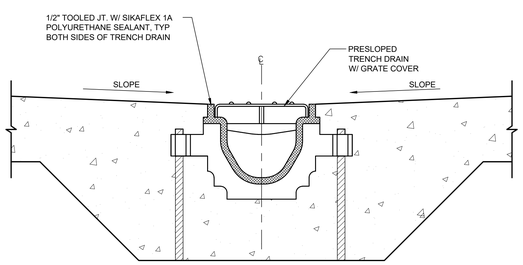

4 A11.0 TRENCH DRAIN @ DRYING
SCALE: 3" = 1'-0"

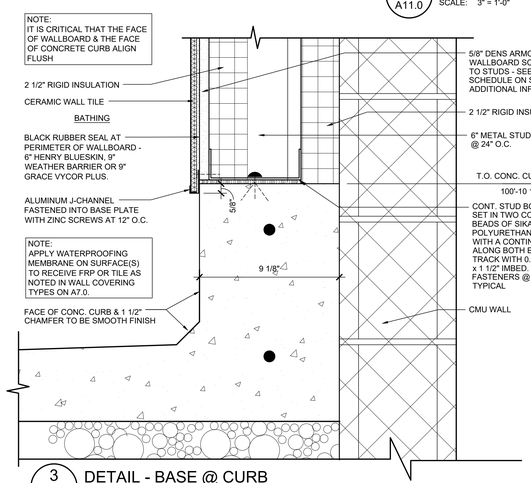

3 A11.0 DETAIL - BASE @ CURB
SCALE: 3" = 1'-0"

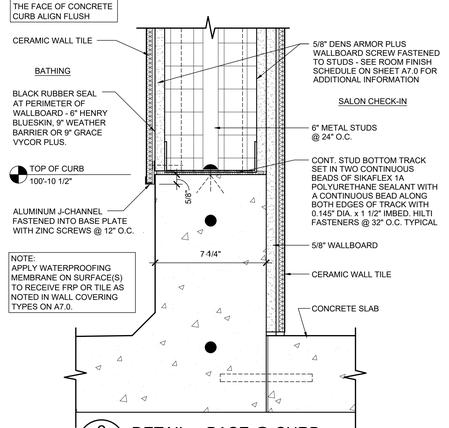

2 A11.0 DETAIL - BASE @ CURB
SCALE: 3"=1'-0"

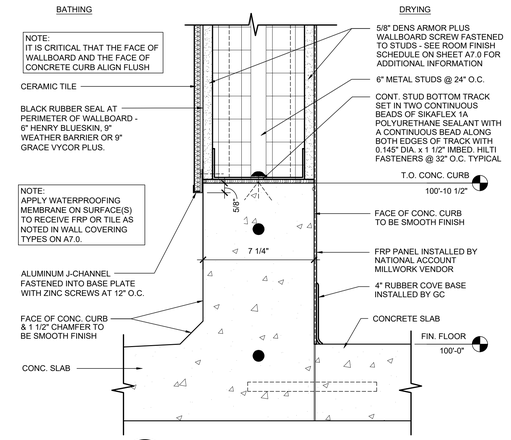

1 A11.0 DETAIL - BASE @ CURB
SCALE: 3" = 1'-0"

TENANT:

PETSMART

19601 North 27th Avenue
Phoenix, Arizona 85027 - (623) 580-6100

PROJECT:

16K 2025 US INSTRUCTION SET

FEBRUARY 12, 2025

ARCHITECT:

CONSULTANT:

SEAL:

CITY SEAL:

DISCLAIMER:
THIS DRAWING AND DESIGN IN COPYRIGHT PROTECTED WHICH SHALL NOT BE USED, REPRODUCED OR REVISED WITHOUT WRITTEN PERMISSION BY PETSMART. THE CONTRACTOR SHALL CHECK AND VERIFY ALL DIMENSIONS AND UTILITY LOCATIONS AND REPORT ALL ERRORS AND OMISSIONS PRIOR TO COMMENCING WORK.
THIS DRAWING IS NOT TO BE SCALED.

ISSUED FOR:

#	DESCRIPTION	DATE

PROJECT NO: 16K 2025 US INSTRUCTION SET

ORIGINAL SCALE: AS INDICATED

DRAWN BY: XXX

CHECKED BY: XXX

PAGE # 23 OF: 47

IF THIS BAR IS NOT 1" LONG, ADJUST YOUR PLOTTING SCALE 1"

DISCIPLINE: ARCHITECTURAL

TITLE:

WALL SECTIONS AND DETAILS

SHEET NUMBER:

A11.0